Reversing Polarity

"Provides a comprehensive, clean, efficient solution for reversing polarity."

Trombetta's Reversing Polarity (RP) DC Contactors provide a cost effective and simple solution for reversing polarity of permanent magnet DC motors. By integrating two DC Contactors into a single unit, Trombetta has streamlined the assembly. The result is less assembly time, less potential for problems and more reliable performance.

The RP can also be customized to specific motors and load requirements. The RP is perfect for any application that requires reversing motion: Truck winch, tarp systems, boatlifts, RV slide-outs and RV leveling systems.

TROMBETTA®

DC Power Solutions for a Harsh World

Lake-View Electronics Corporation **1-800-686-8439** **www.lvelectronics.com**

Reversing Polarity DC Contactor Specifications

Coil Terminals	(2) Low Current Terminals (1/4" spade)
	(4) 5/16-24 Studs - High Current Terminals, 2 for motor and 2 for battery
Standard Operating Temperature Range	-40º C to 50º C
	Relay is dust and splash resistant.

Coils / Contact

Model	Max Sustained Duty Cycle[1]*	Max On Time*†	Pull In Voltage[2]	Hold Voltage[2]	Coil Resist Ohms	Resistive Load Carry/Interrupt Capability (Amps)[3]	Inductive Load Carry/Interrupt Capability (Amps)[3]	Peak Inductive Inrush Capability (Amps)[4]	Electrical Cycle Life	Contact Material
12V Standard	16%	2 minutes	7.5	2.5	5.6	75 for 2 min. (125 for 30 sec.) 150 amps	75 for 2 min. (125 for 30 sec.) 150 amps	150	10,000	Copper
12V Enhanced	16%	2 minutes	7.5	2.5	5.6	75 for 2 min. (125 for 30 sec.) 150 amps	75 for 2 min. (125 for 30 sec.) 150 amps	350	5,000	Copper and Silver Alloy Plating
12V High Perf.	16%	2 minutes	8.0	2.5	5.6	75 for 2 min. (140 for 30 sec.) 250 amps	75 for 2 min. (140 for 30 sec.) 250 amps	500	5,000	Copper with Silver Alloy Plating
24V Enhanced	16%	2 minutes	15	5.0	25.5	75 for 2 min. (125 for 30 sec.) 180 amps	75 for 2 min. (125 for 30 sec.) 180 amps	150	10,000	Copper and Silver Alloy Plating

[1]Nominal coil voltage applied starting from 25° C DC Contactor temperature. Duty Cycle=On Time/(On Time + Off Time). [2]Voltages listed are minimum required at 25° C coil temperature. Minimum voltage requirements will increase with coil temperature. [3]Amps at Max Duty Cycle. [4]Risetime ≥ 3 milliseconds to 80% of peak inrush with linear decay to run (carry) current in ≤.1 seconds.

TYPICAL DIMENSIONS

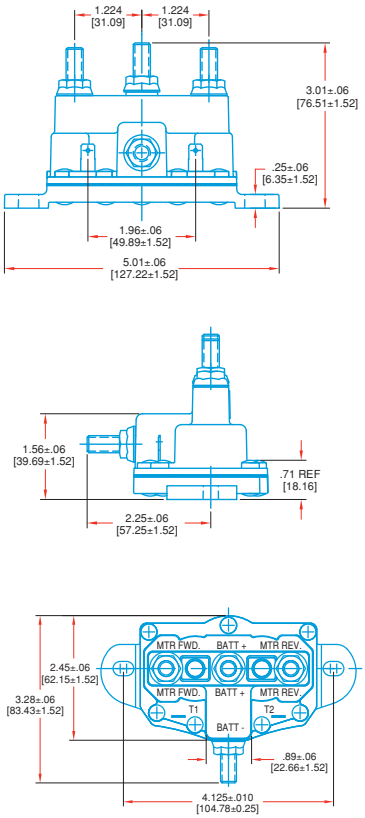

Dimensions in Brackets [ ] are metric

Enter Complete Part Number Below –

Ordering Information • Some configurations are not available. Contact your Trombetta sales rep before ordering.

Family	Coil Connection Configuration	High Current Stud		Coil Voltage	Bracket Type	Bracket Location		Duty Cycle	Contact Material	Sealing
X	X	X	-	X X	X	X	-	X	X	X
2- Reversing Polarity (RP)	**1-** Grounded Coils (2) each with (1) 1/4" Spade and a common 5/16-24 Central Ground	**4-** Standard R.P.		**12-** 12 Volt **24-** 24 Volt	**1-** Hose Clamp Mount Bracket **3-** Molded	**1-** Standard Location		**A-** 20% Sustained	**1-** Copper **5-** Alloy Silver Contact Bars **6 -** Alloy Silver Contacts & Contact Bars	**1-** Resistant to dust, liquid

*Additional Max On Times and Duty Cycle Combinations:

Max On Time	Duty Cycle Max
60 seconds	35%
90 seconds	25%
120 seconds	16%
150 seconds	5%

†Trombetta has the ability to test for customer's specific conditions.

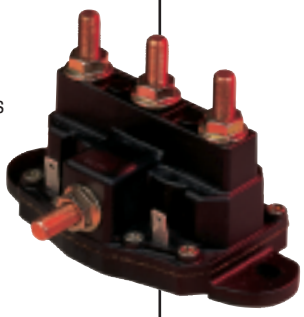

Rev 7/19

TROMBETTA
DC Power Solutions for a Harsh World